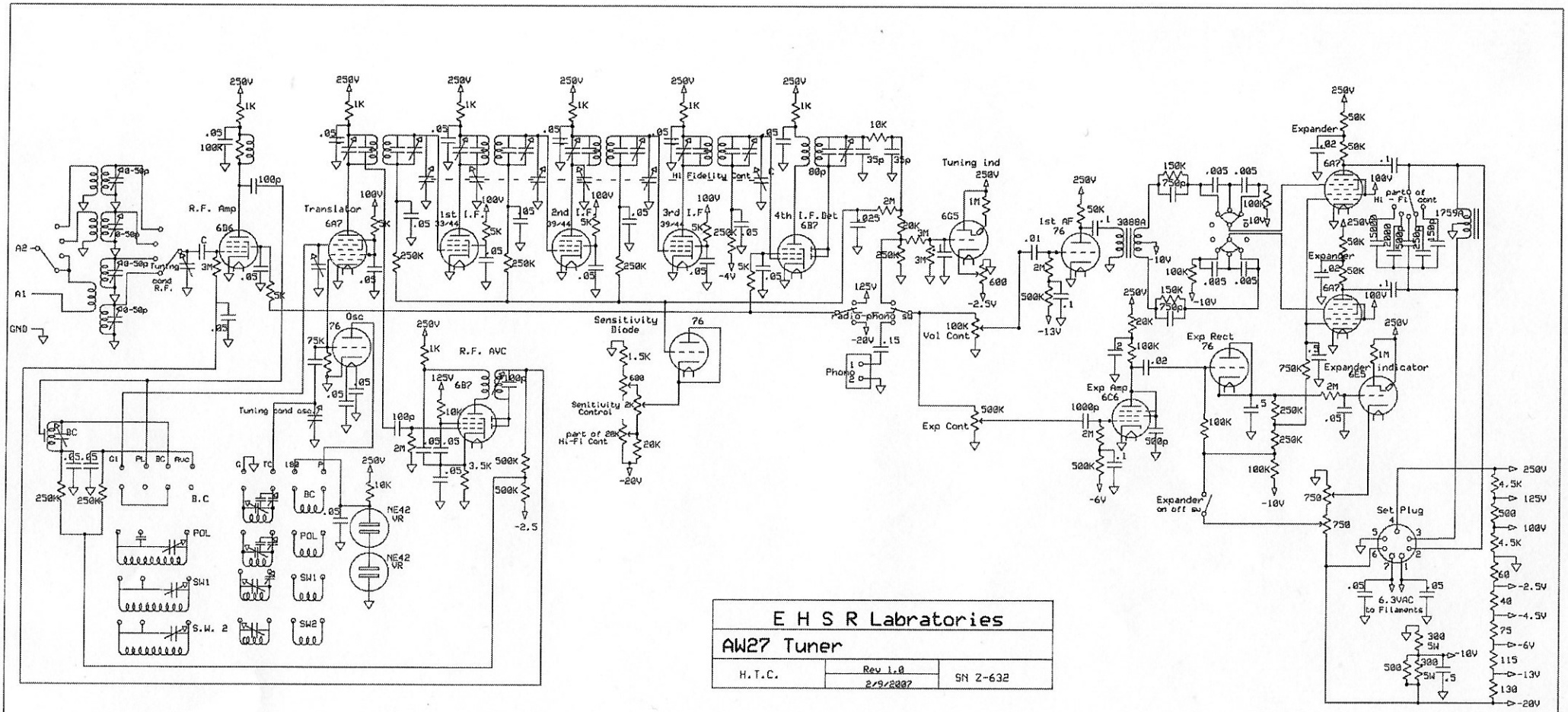
R.F. Amp
6D6
Translator
6A7
1st I.F.
2nd I.F.
3rd I.F.
4th I.F. Det
6B7
Hi Fidelity Cont
Tuning ind
6G5
1st AF
76
3088A
Exp Amp
6C6
Exp Rect
76
Expander
6A7
Expander indicator
6E5
Osc
76
R.F. AVC
6B7
Sensitivity Diode
Sensitivity Control
part of 20K Hi-Fi Cont
Radio-phono sw
Phono
Vol Cont
Exp Cont
Expander on off sw
Set Plug
6.3VAC to Filaments
Tuning cond R.F.
Tuning cond osc
NE42 VR
POL
SW1
S.W. 2
SW2
B.C
A2
A1
GND
E H S R Labratories
AW27 Tuner
H.T.C.
Rev 1.0
2/9/2007
SN 2-632